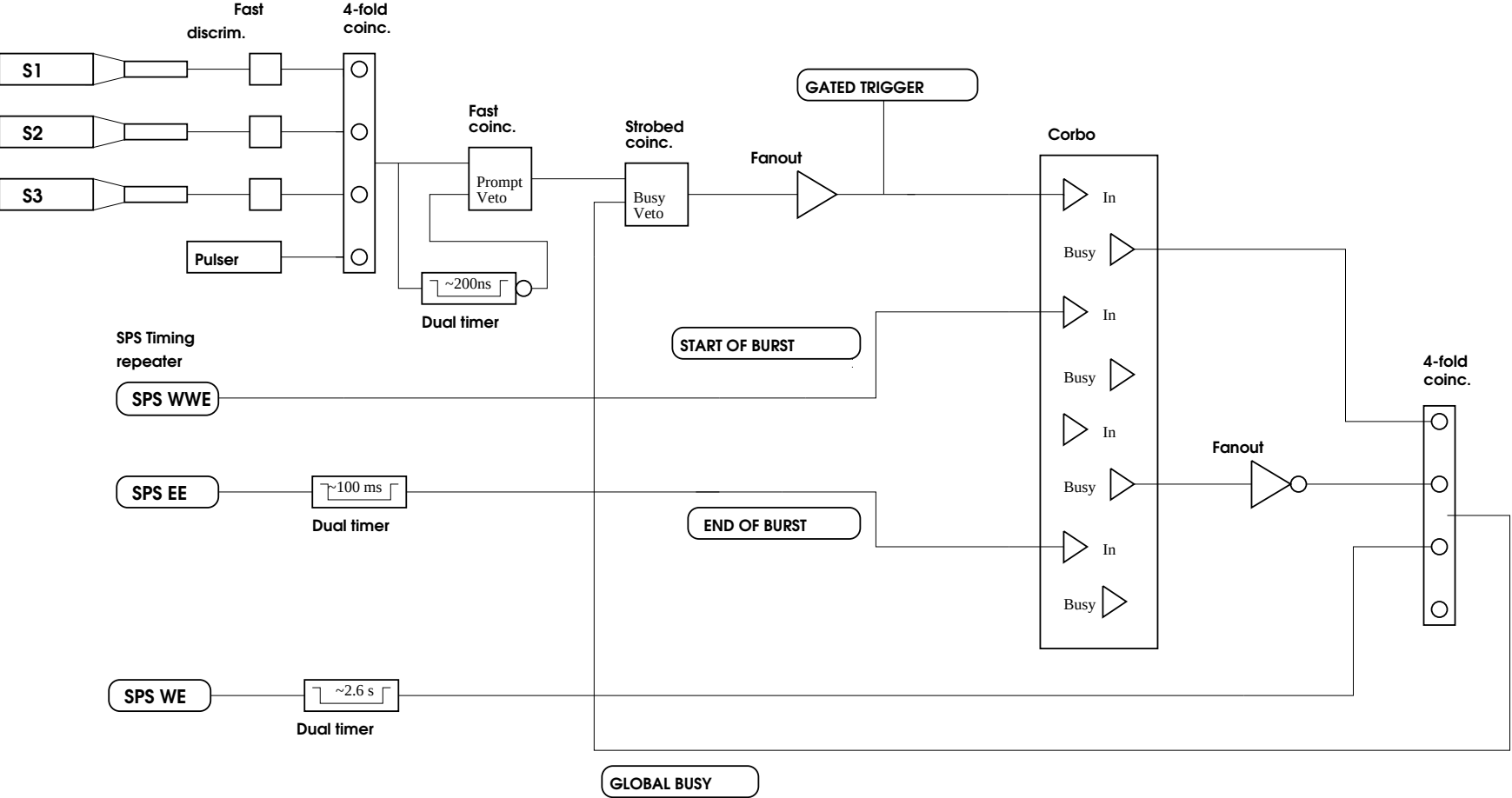
Fast
discrim.
4-fold
coinc.
S1
S2
S3
Pulser
Fast
coinc.
Prompt
Veto
~200ns
Dual timer
Strobed
coinc.
Busy
Veto
Fanout
GATED TRIGGER
Corbo
In
Busy
In
Busy
In
Busy
In
Busy
SPS Timing
repeater
SPS WWE
START OF BURST
SPS EE
~100 ms
Dual timer
END OF BURST
Fanout
4-fold
coinc.
SPS WE
~2.6 s
Dual timer
GLOBAL BUSY